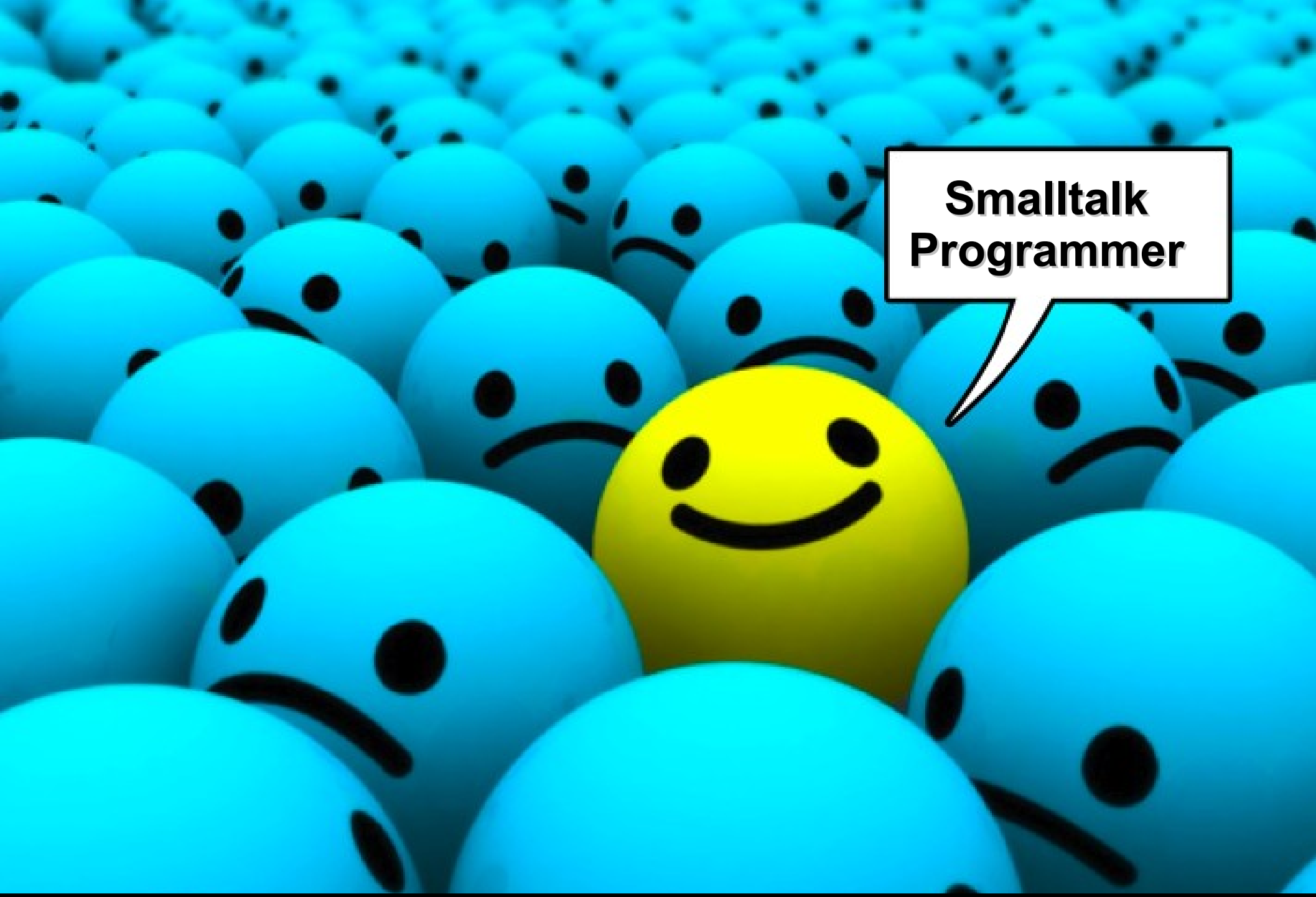

Ing. Mariano Martínez Peck
marianopeck@gmail.com

SqueakDBX

The co
on
to
database
access

MARKETING

SqueakDBX team
Mariano M. Peck
Esteban Lorenzano
Germán Palacios
Hernán Cassinelli

F.A.Q

- **Who are we?**
- **How did it begin?**
- **What is actually SqueakDBX?**

RDBMS VS. OODB

Please, don't fight ;)

Anyway, we rather program in objects and use RDBMS than using Java with RDBMS ;)

Survey 1/2

How many times were you forced to use a particular database?

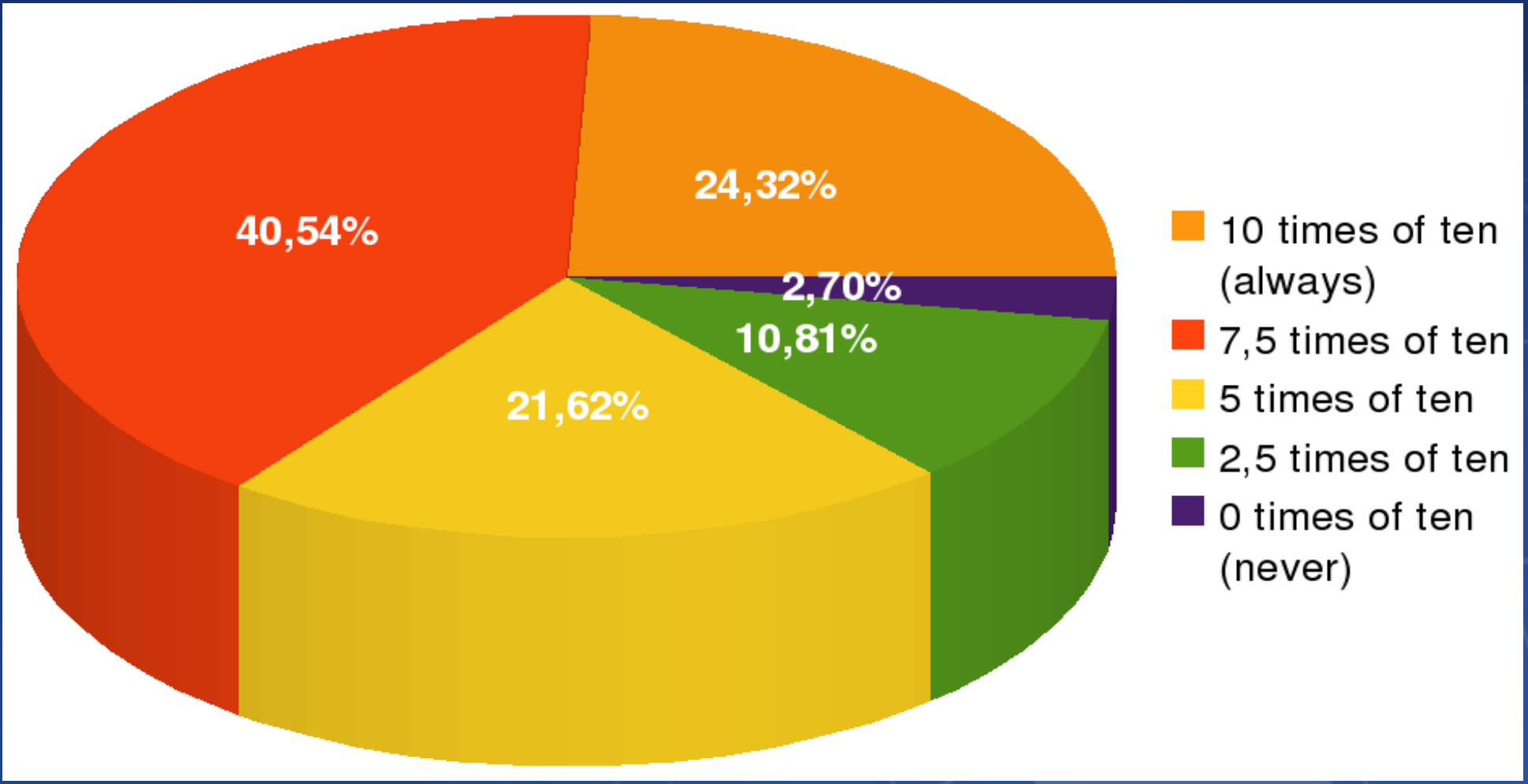

Survey 2/2

Which databases?

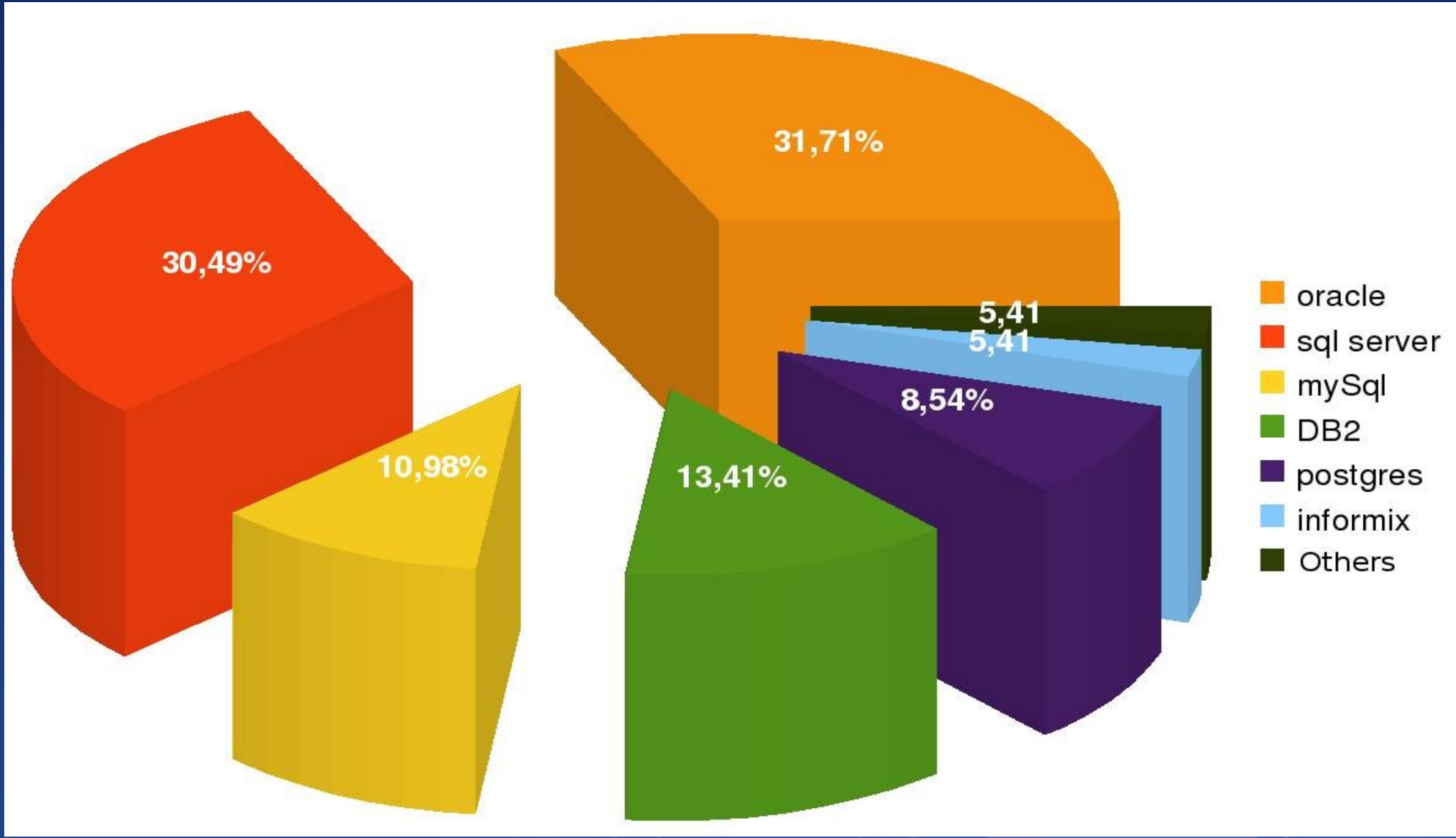

Squeak's current situation

- Only MySQL and PostgreSQL native drivers.
- Limited ODBC driver
- Glorp in Squeak

only works with

PostgreSQL

We are in trouble...

- Direct SQL queries: 20%

- Using GLORP: 8.52%

Our goal

- Direct SQL queries: 100%

- Using GLORP: 100%

Our purpose

OpenDBX architecture

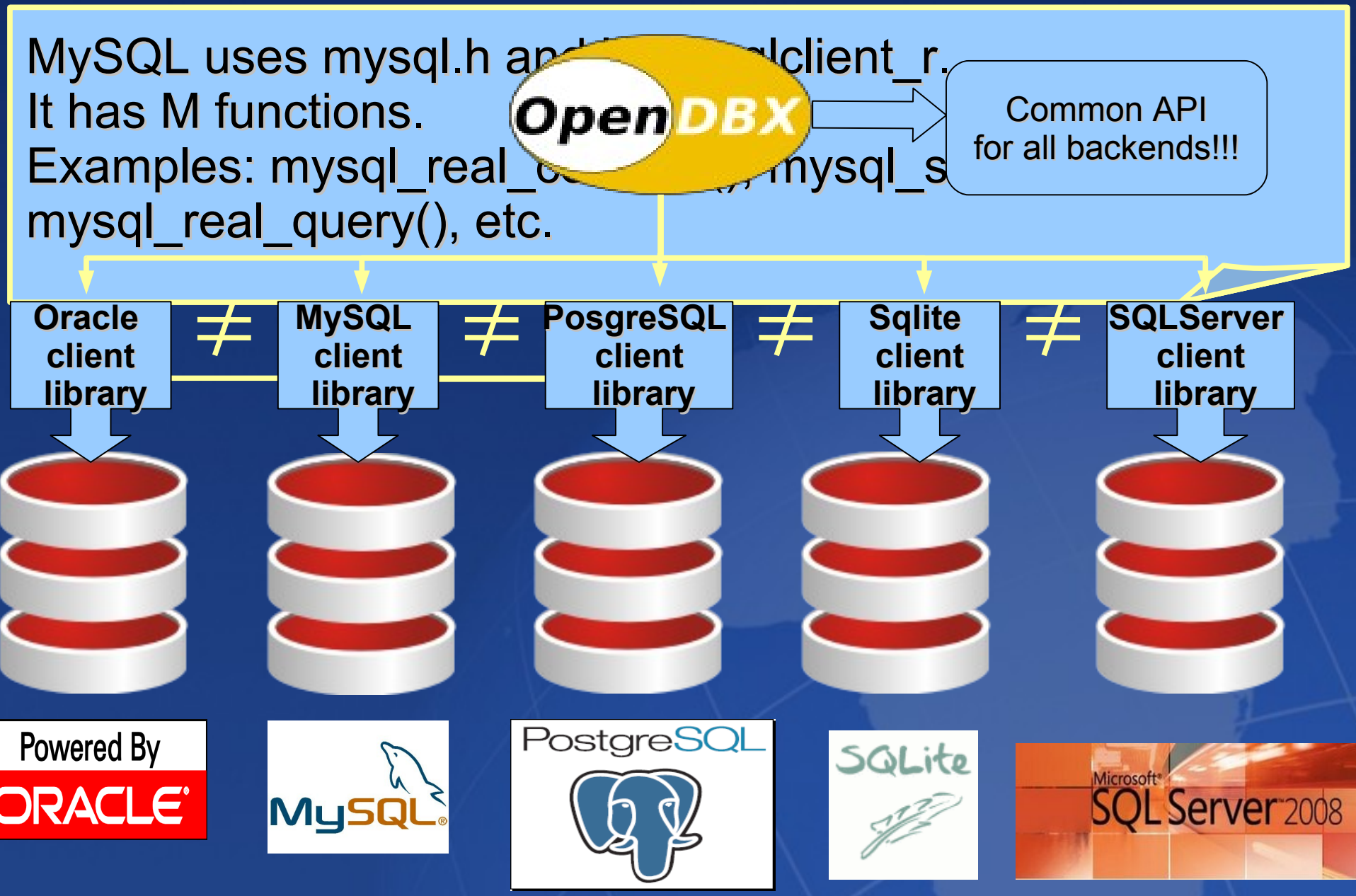

Why OpenDBX?

- It is fast
- Simple to use
- Flexible
- Cross platform
- Asynchronous queries
- Specific RDBMS features
- Good documentation

Deployment and infrastructure

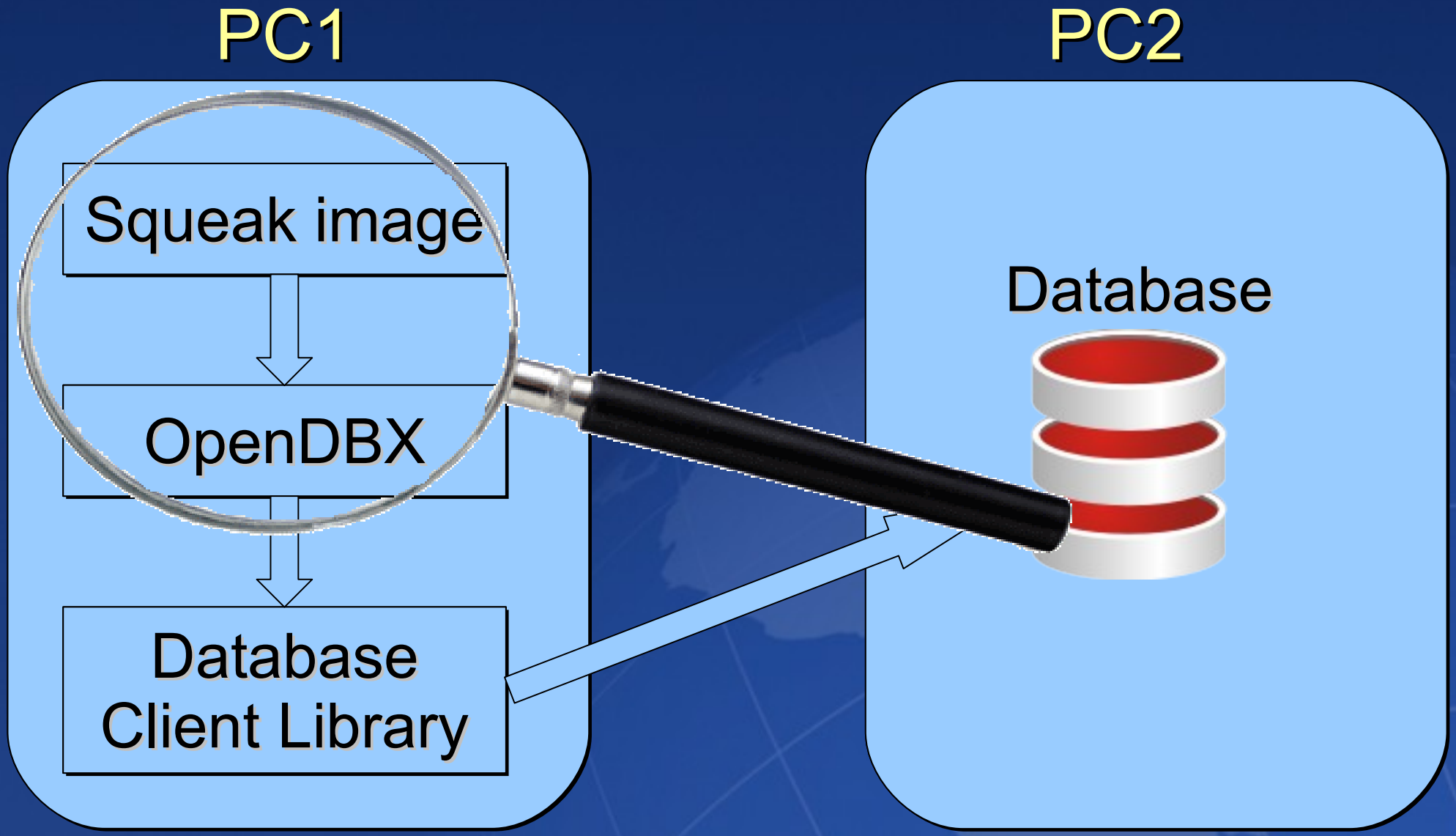

Smalltalk and C

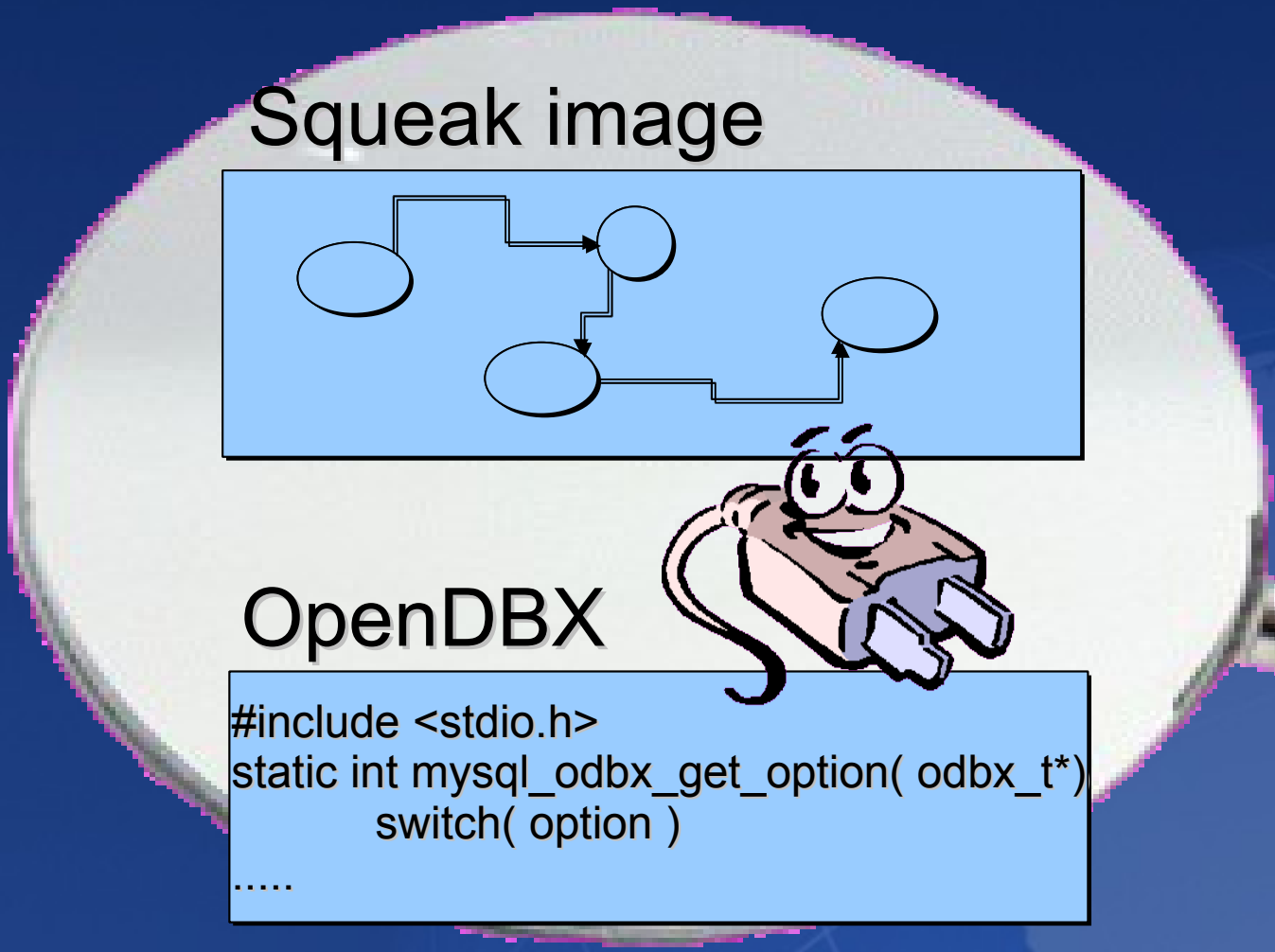

Smalltalk-C Connector

FFI (Foreign Function Interface)

- Main problem: Locks the entire VM

Squeak ODBC driver queries

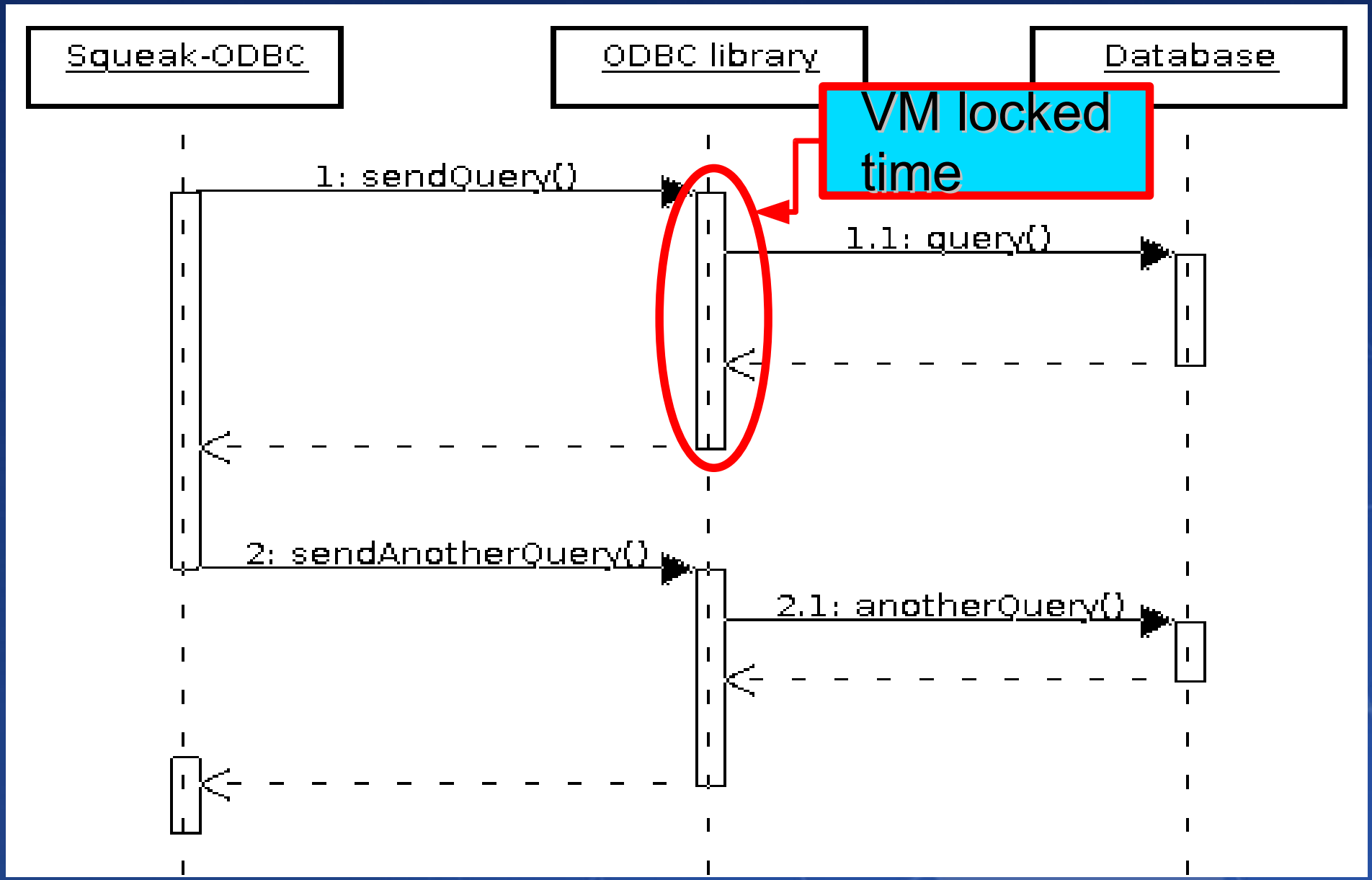

OpenDBX Connector

FFI (Foreign Function Interface)

- Main problem: Locks the entire VM
- Our solution:
  - Asynchronous queries
  - “Mini” VM locks
  - Retry schema
  - DBXQuerySettings>>timeout:

SqueakDBX queries

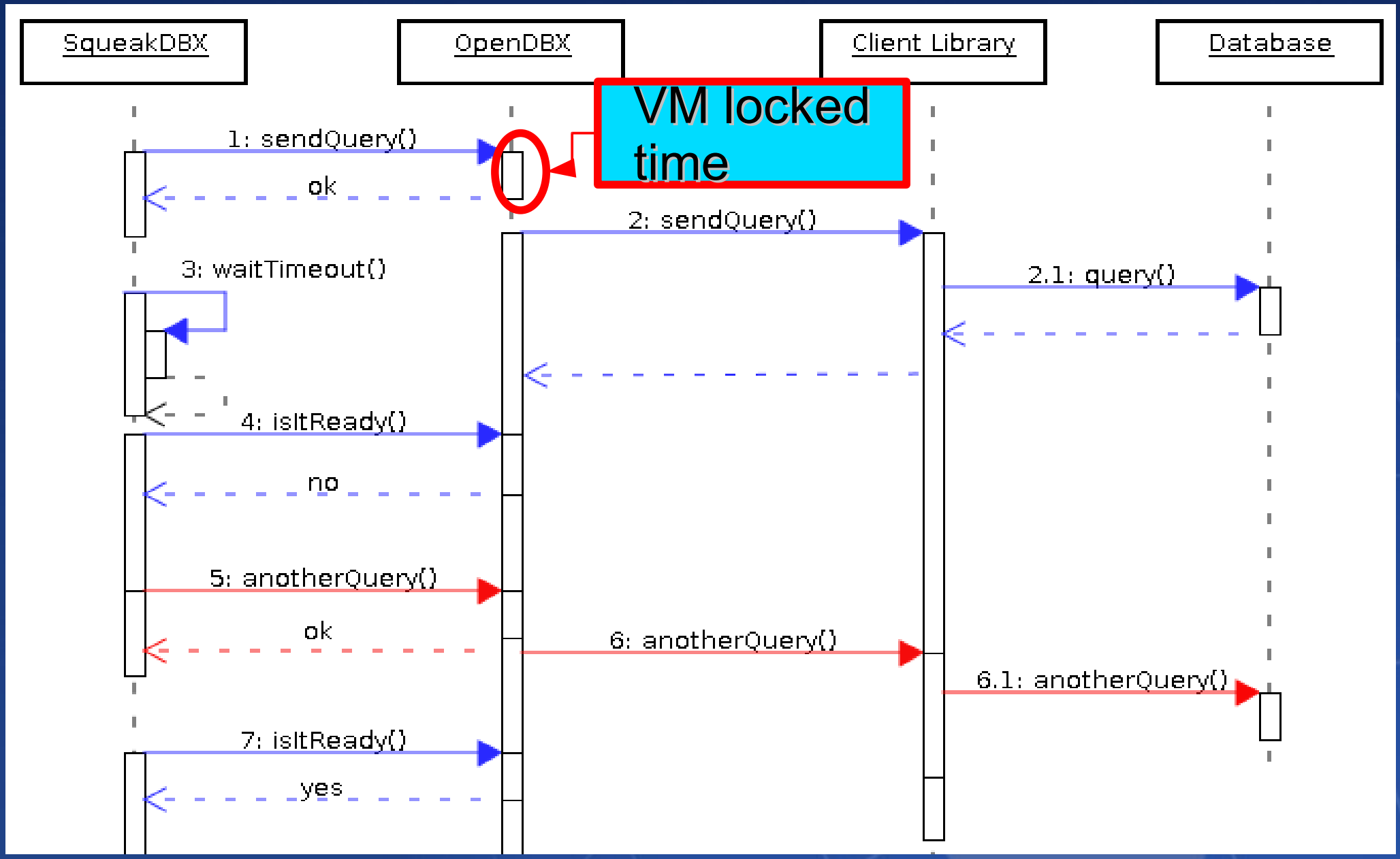

Database access in Smalltalk

SqueakDBX	Smalltalk driver
✔ One for all databases	✗ One for each database
✔ Less time and effort	✗ More time and effort
✔ Good performace	✗ Performance issues?
✔ OSS and proprietary	✗ Only OSS
✗ Difficult to debug	✔ Easier to debug
✗ Platform dependent	✔ Platform independent
✗ FFI locks the VM	✔ Non-locking

SqueakDBX design

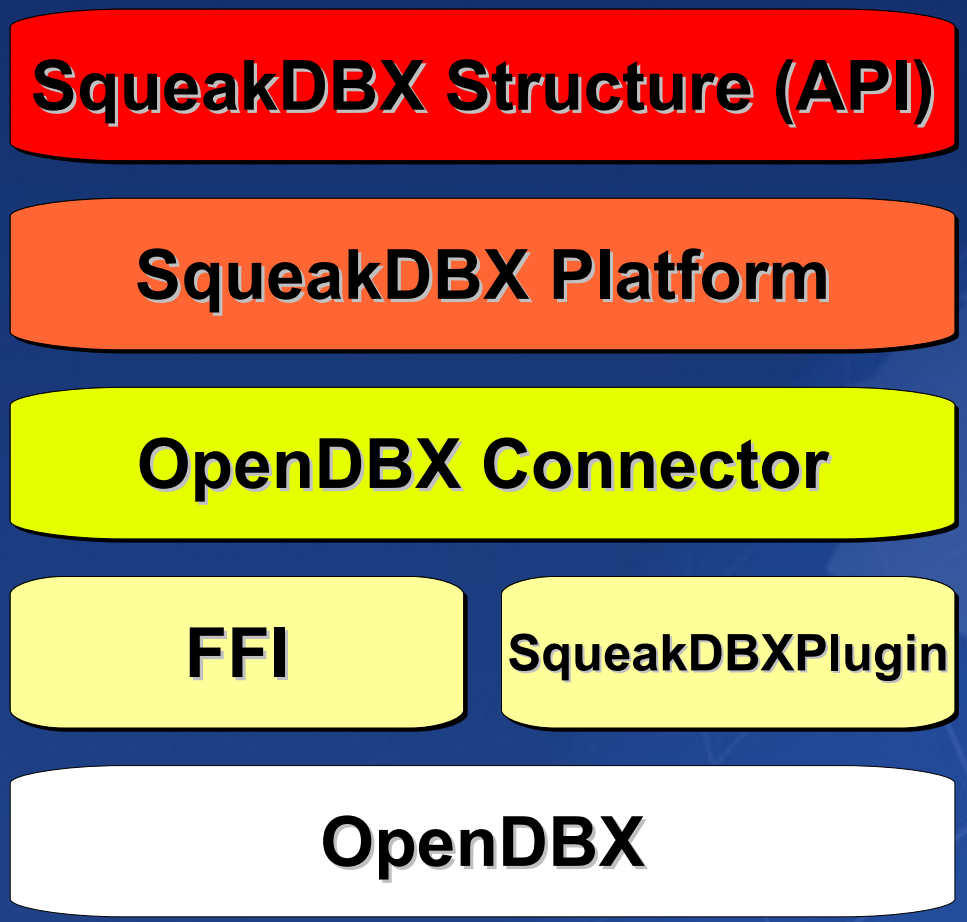

DBXConnection
DBXConnectionSettings
DBXResultSet
DBXPlatform
DBXResult
DBXSpecialOptions
DBXErrorSeverity
...
DBXTimeSpec
...

Showtime

Who can use SqueakDBX?

- An application
- Glorp
- Magritte-RDB
- SqueakSave
- Moe

Current backends and OS

Benchmark for PostgreSQL

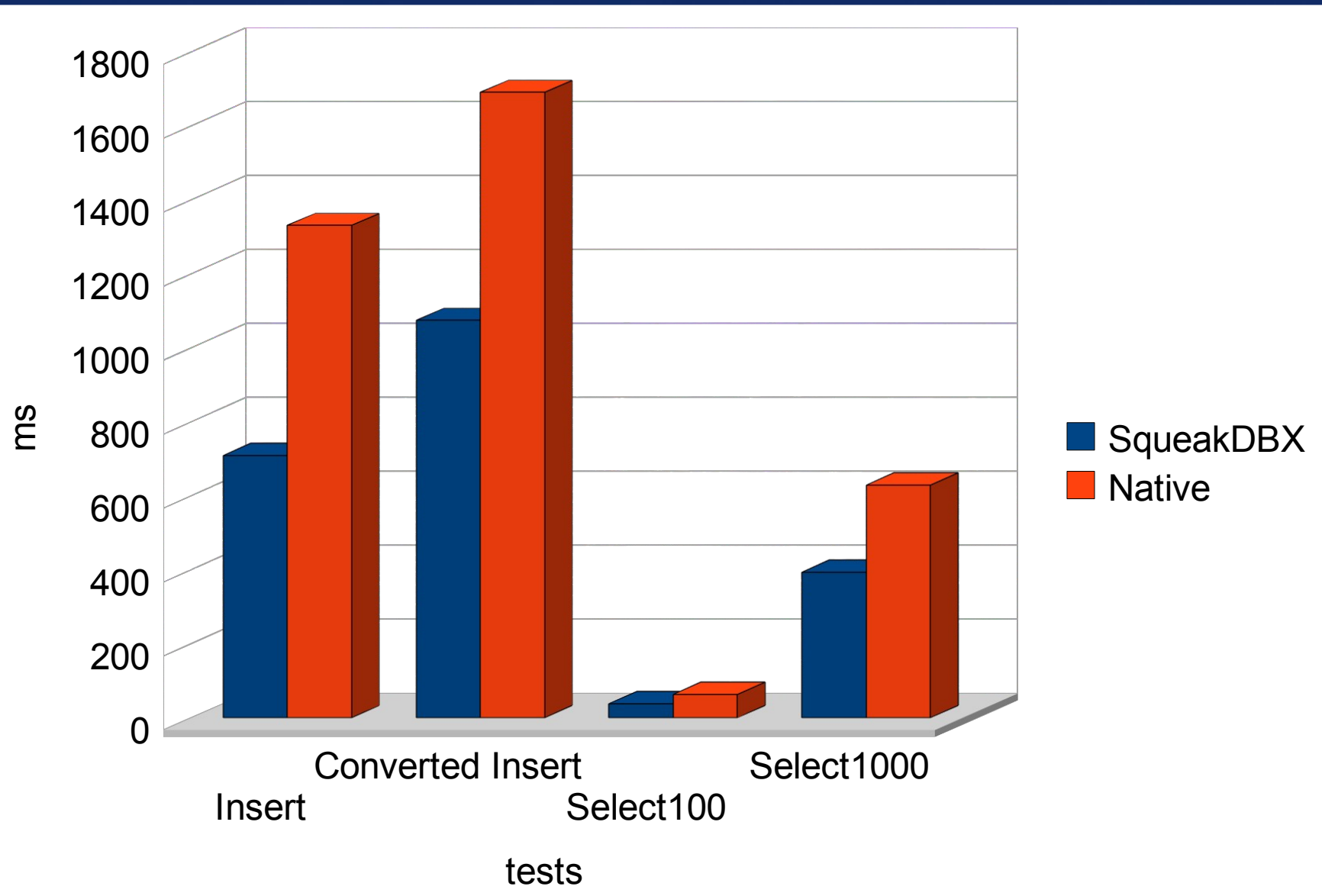

Benchmark for MySQL

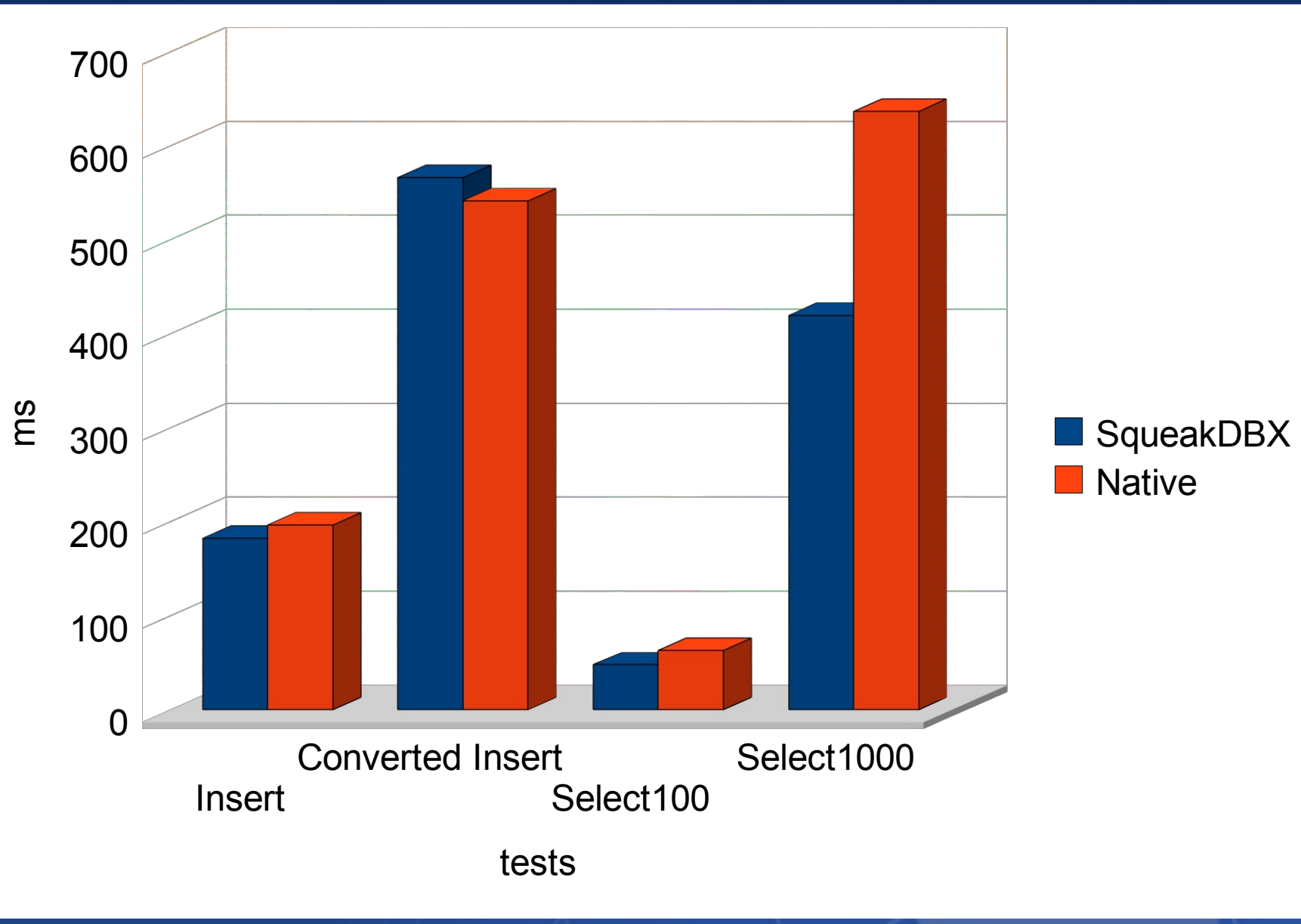

Features

- Mini VM locks
- SqueakDBXPlugin
- Automatic fields conversion
- Configurable logging/trace
- Special RDBMS features
- Multistatements
- Automatic release of resources

What do we have?

- **Enough unit tests**
- **Acceptable test coverage**
- **SmallLint runs**
- **Good enough design**
- **GLORP integration**

Documentation

- Website
- Documented code
- Mailing list
- Benchmarks

What will come

- Complete Glorp refactor and integration
- More backends in more OS
- Large objects support
- Better SPs and functions support
- Continue with SqueakDBXPlugin
- Try Alien FFI
- Port to Smalltalk/X ?

Glorp progress

- Port from Squeak to Pharo
- First refactor to SqueakDatabaseAccesor
- Driver for native driver
- Driver for SqueakDBX (PostgreSQL)

Glorp before SqueakDBX

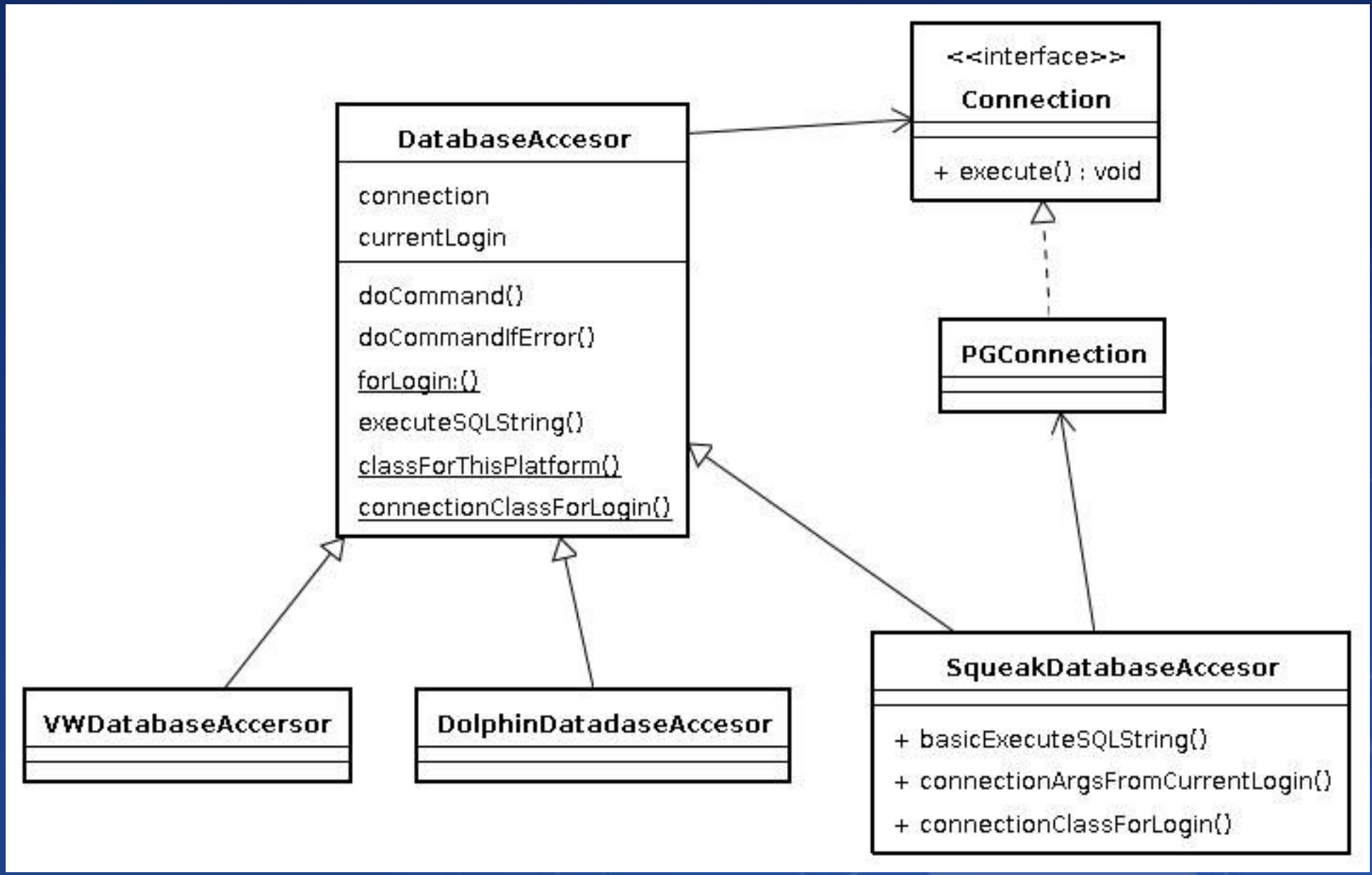

Glorp after SqueakDBX

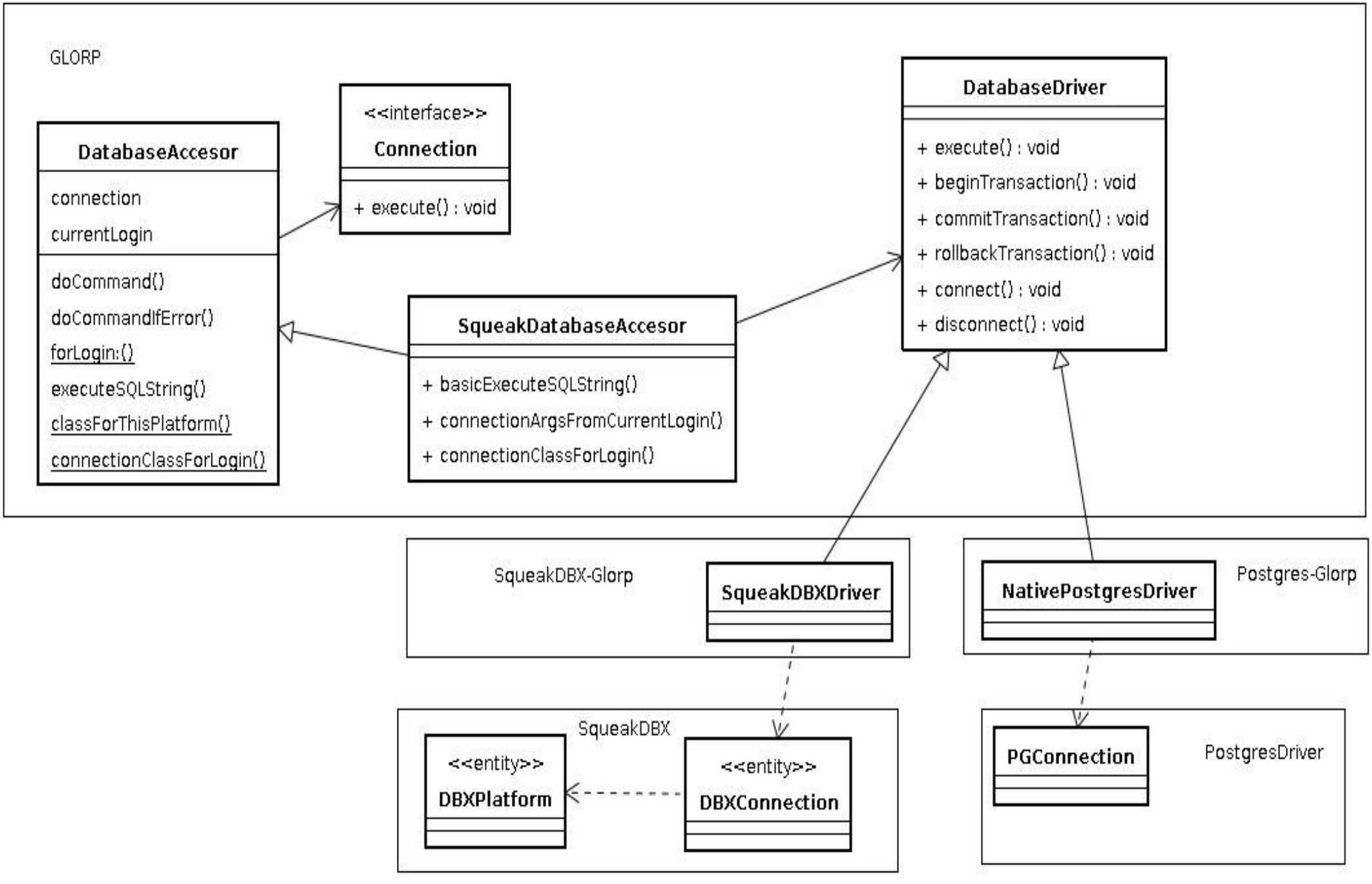

Special thanks to...

Norbert Sendetzky

GLORP

Alan Knight

Stéphane Ducasse

```
aConnection execute: 'select * from questions
    where has_answer = true'
```

Ing. Mariano Martínez Peck marianopeck@gmail.com

Thank you very much